SKF NUP 208 ECJ

Single row cylindrical roller bearing, NUP design

Single row cylindrical roller bearings are designed to accommodate high radial loads in combination with high speeds. Having two integral flanges on the outer ring and one integral flange and one loose flange ring on the inner ring, NUP design bearings can locate the shaft axially in both directions. An important feature is the separable design, which facilitates mounting and enables the bearing components to be interchanged.

Technical specifications

Dimensions	
Bore diameter	40 mm
Outside diameter	80 mm
Width	18 mm
Shoulder diameter of inner ring	54 mm
Shoulder diameter of outer ring	67.4 mm
Raceway diameter of inner ring	49.5 mm
Chamfer dimension	1.1 mm
Chamfer dimension of loose flange ring	1.1 mm

Abutment dimensions	
Diameter of spacer sleeve	47 mm
Diameter of shaft abutment	56 mm
Diameter of housing abutment	72.8 mm
Radius of fillet	1 mm

Calculation data	
SKF performance class	SKF Explorer
Basic dynamic load rating	62 kN
Basic static load rating	53 kN
Fatigue load limit	6.7 kN
Reference speed	9500 r/min
Limiting speed	11000 r/min
Minimum load factor	0.15
Limiting value	0.2
Calculation factor	0.6

Performance	
Basic dynamic load rating	62 kN
Basic static load rating	53 kN
Reference speed	9500 r/min
Limiting speed	11000 r/min
SKF performance class	SKF Explorer

Properties	
Bearing part	Complete bearing
Axial displacement capability	None
Number of rows	1
Locating feature, bearing outer ring	Without
Bore type	Cylindrical
Cage	Sheet metal
Number of flanges, outer ring	2
Number of flanges, inner ring	1
Loose flange	Inner ring loose flange
Radial internal clearance	CN
Tolerance class	Normal
Coating	Without
Sealing	Without

Lubricant	None
Relubrication feature	Without
Indicative carbon footprint for new product	1.5 kg CO₂e

Logistics	
Product net weight	0.406 kg
eClass code	23-05-09-01
UNSPSC code	31171505
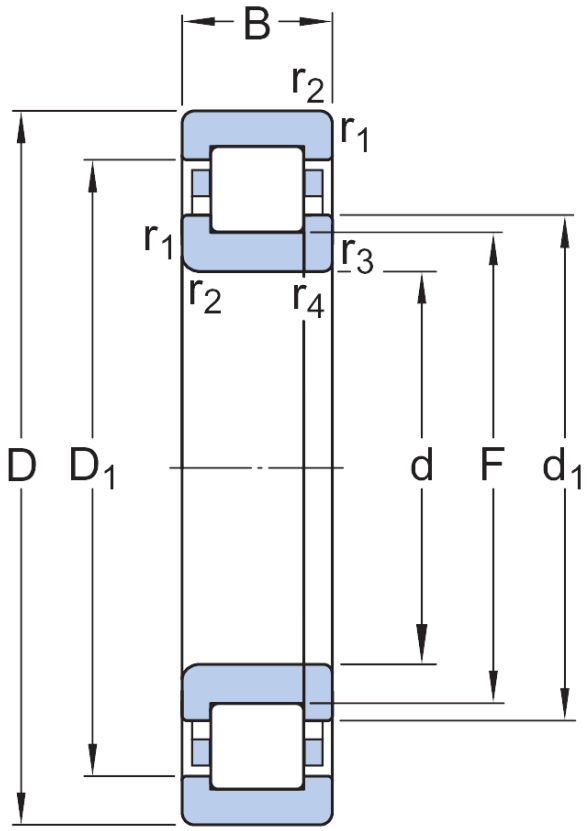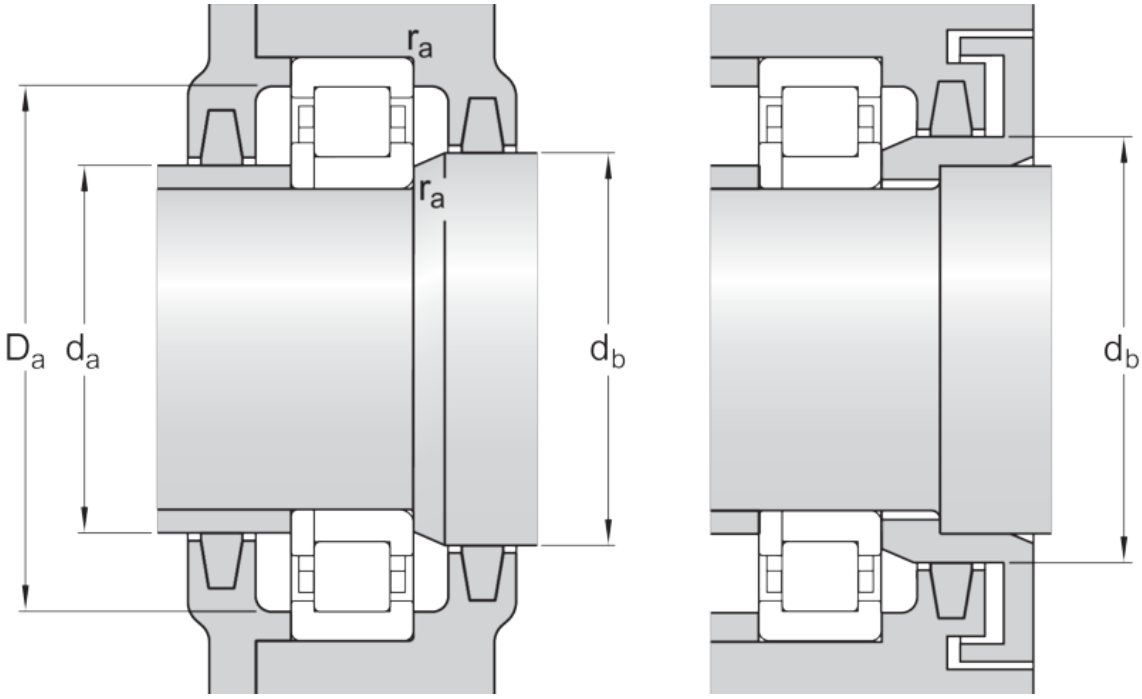
SKF drawings