SKF 6222-2Z

Deep groove ball bearing with seals or shields

Single row deep groove ball bearings with seals or shields are particularly versatile, have low friction and are optimized for low noise and low vibration, which enables high rotational speeds. They accommodate radial and axial loads in both directions, are easy to mount, and require less maintenance than many other bearing types. The integral sealing can significantly prolong bearing service life because it keeps lubricant in the bearings and contaminants out.

Technical specifications

Dimensions	
Bore diameter	110 mm
Deviation limits of mid-range bore diameter	-0.015..0 mm
Outside diameter	200 mm
Deviation limits of mid-range outside diameter	-0.02..0 mm
Width	38 mm
Deviation limits of ring width	-0.1..0 mm
Shoulder diameter	138 mm
Recess diameter	176.7 mm
Chamfer dimension	2.1 mm
ISO tolerance class for dimensions	P6 and tighter width tolerance

Abutment dimensions	
Diameter of shaft abutment	122 mm
Diameter of shaft abutment	137.9 mm
Diameter of housing abutment	188 mm
Radius of shaft or housing fillet	2 mm

Calculation data	
SKF performance class	SKF Explorer
Basic dynamic load rating	151 kN
Basic static load rating	118 kN
Fatigue load limit	4 kN
Reference speed	6700 r/min
Limiting speed	3400 r/min
Minimum load factor	0.03
Calculation factor	14.3

Tolerances of run-out	
Range of section height at inner ring of assembled bearing	25 µm
Range of section height at outer ring of assembled bearing	50 µm
ISO tolerance class for geometrical tolerances	Normal

Performance	
Basic dynamic load rating	151 kN
Basic static load rating	118 kN
Reference speed	6700 r/min
Limiting speed	3400 r/min
SKF performance class	SKF Explorer

Properties	
Filling slots	Without
Number of rows	1
Locating feature, bearing outer ring	Without
Bore type	Cylindrical
Cage	Sheet metal
Matched arrangement	No
Radial internal clearance	CN

Material, bearing	Bearing steel
Coating	Without
Sealing	Shield on both sides
Sealing type	Non-contact
Lubricant	Grease
Relubrication feature	Without
Indicative carbon footprint for new product	16.1 kg CO₂e

Logistics	
Product net weight	4.47 kg
eClass code	23-05-08-01
UNSPSC code	31171504
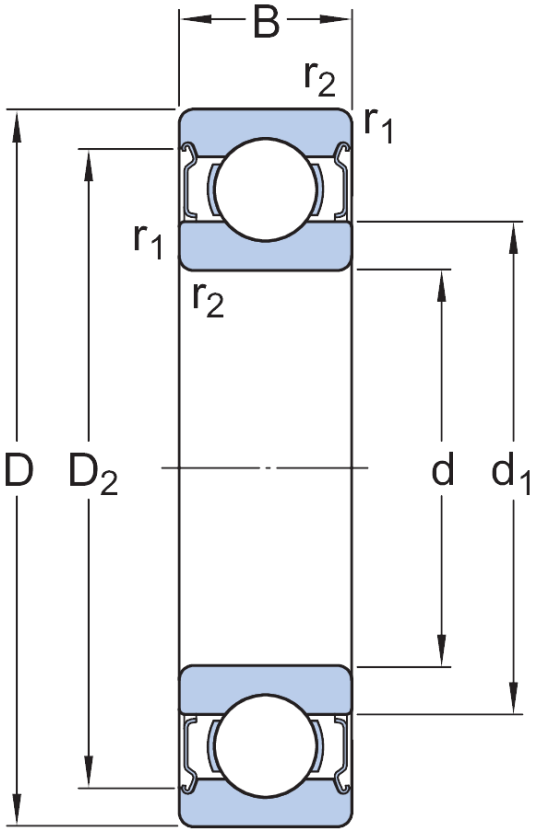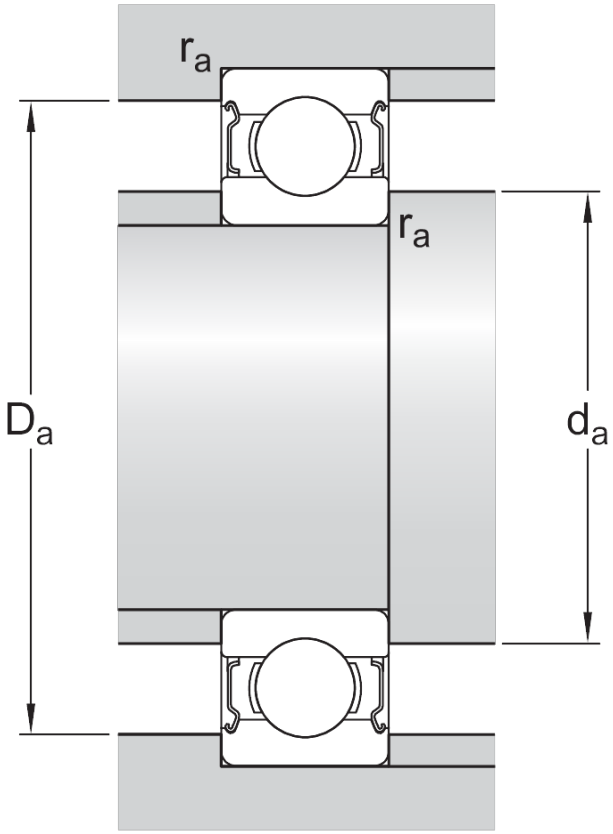
SKF drawings