SKF 7203 BEGAP

Single row angular contact ball bearing

These single row angular contact ball bearings can accommodate radial and axial loads acting simultaneously, where the axial load acts in one direction only. They can operate at high speeds and, depending on the variant, even very high speeds. They are more suitable than deep groove ball bearings for supporting large axial forces acting in one direction.

Technical specifications

Dimensions	
Bore diameter	17 mm
Outside diameter	40 mm
Width	12 mm
Shoulder diameter of inner ring (large side face)	26.25 mm
Shoulder diameter of inner ring (small side face)	21.66 mm
Shoulder diameter of outer ring (large side face)	31.15 mm
Distance side face to pressure point	18 mm
Chamfer dimension	0.6 mm
Chamfer dimension	0.6 mm
ISO tolerance class for dimensions	P6
Contact angle	40 °

Abutment dimensions	
Diameter of shaft abutment	21.2 mm
Abutment diameter housing	35.8 mm
Diameter of housing abutment	35.8 mm
Radius of fillet	0.6 mm
Radius of fillet	0.6 mm

Calculation data	
SKF performance class	SKF Explorer
Basic dynamic load rating	11 kN
Basic static load rating	5.85 kN
Fatigue load limit	0.25 kN
Reference speed	22000 r/min
Limiting speed	22000 r/min
Minimum axial load factor	0.0006
Minimum radial load factor	0.1
Limiting value	1.1
Calculation factor (single, tandem)	0.35
Calculation factor (single, tandem)	0.26
Calculation factor (single, tandem)	0.57
Calculation factor (back-to-back, face-to-face)	0.57
Calculation factor (back-to-back, face-to-face)	0.52
Calculation factor (back-to-back, face-to-face)	0.55
Calculation factor (back-to-back, face-to-face)	0.93

Tolerances of run-out	
ISO tolerance class for geometrical tolerances	P5

Performance	
Basic dynamic load rating	11 kN
Basic static load rating	5.85 kN
Reference speed	22000 r/min
Limiting speed	22000 r/min
SKF performance class	SKF Explorer

Properties	
Contact type	Normal contact (two-point contact)
Number of rows	1
Locating feature, bearing outer ring	Without
Ring type	One-piece inner and outer rings
Cage	Non-metallic
Matched arrangement	No
Universal matching bearing	Yes
Axial internal clearance	Not applicable
Matched condition (axial clearance/ preload)	Light preload
Tolerance class	Class 6 (P6)
Material, bearing	Bearing steel
Coating	Without
Sealing	Without
Lubricant	None
Relubrication feature	Without
Indicative carbon footprint for new product	0.23 kg CO₂e

Logistics	
Product net weight	0.064 kg
eClass code	23-05-08-03
UNSPSC code	31171531
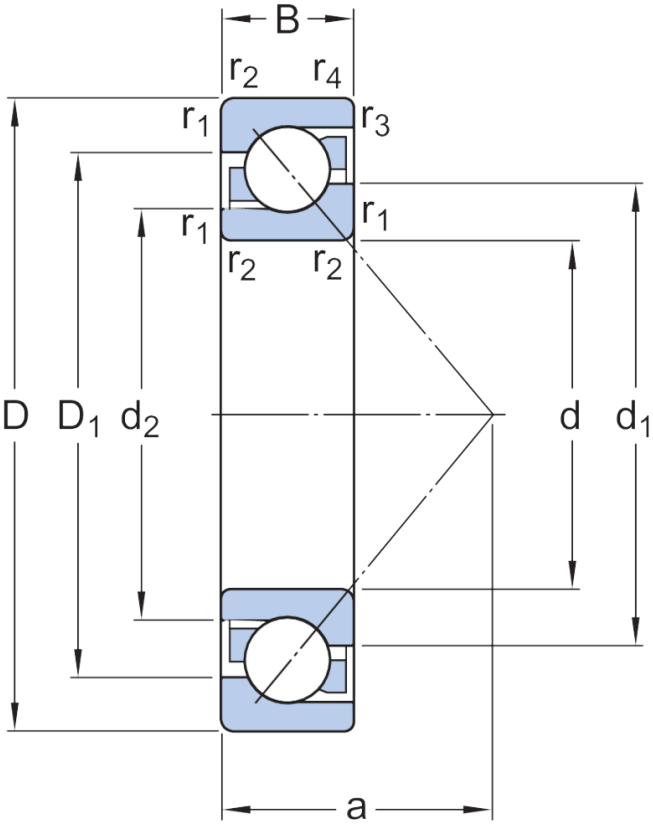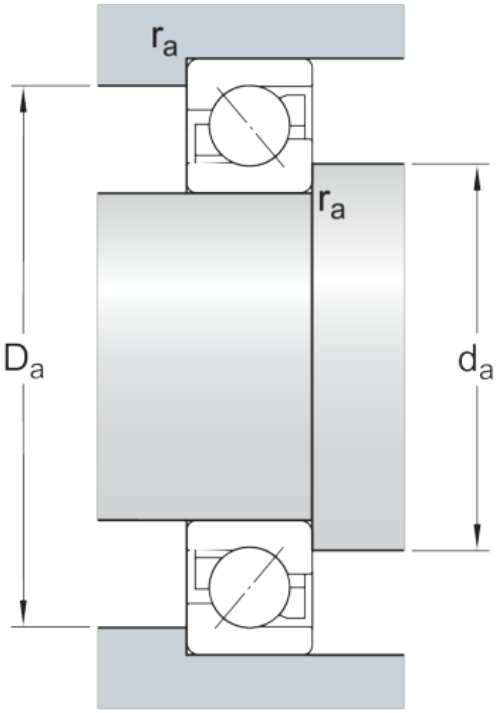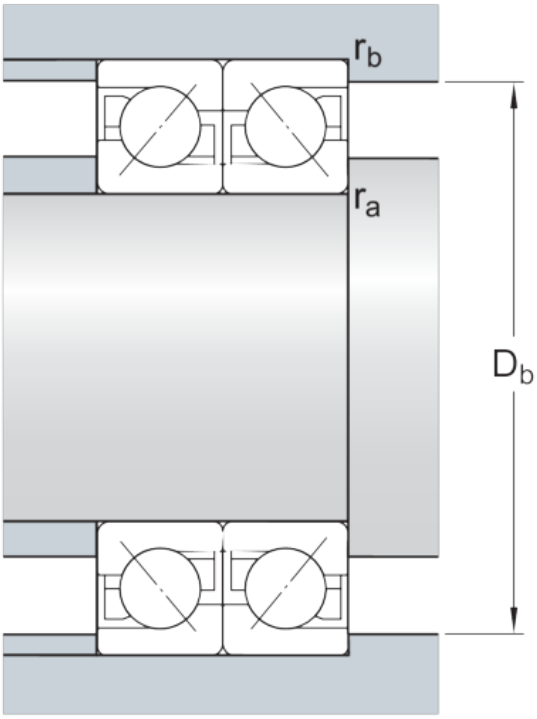
SKF drawings