SKF 6005-Z

Deep groove ball bearing with seals or shields

Single row deep groove ball bearings with seals or shields are particularly versatile, have low friction and are optimized for low noise and low vibration, which enables high rotational speeds. They accommodate radial and axial loads in both directions, are easy to mount, and require less maintenance than many other bearing types. The integral sealing can significantly prolong bearing service life because it keeps lubricant in the bearings and contaminants out.

Technical specifications

Dimensions	
Bore diameter	25 mm
Deviation limits of mid-range bore diameter	-0.008..0 mm
Outside diameter	47 mm
Deviation limits of mid-range outside diameter	-0.009..0 mm
Width	12 mm
Deviation limits of ring width	-0.06..0 mm
Shoulder diameter	32 mm
Recess diameter	42.2 mm
Chamfer dimension	0.6 mm
ISO tolerance class for dimensions	P6 and tighter width tolerance

Abutment dimensions	
Diameter of shaft abutment	28.2 mm
Diameter of shaft abutment	31.9 mm
Diameter of housing abutment	43.8 mm
Radius of shaft or housing fillet	0.6 mm

Calculation data	
SKF performance class	SKF Explorer
Basic dynamic load rating	11.9 kN
Basic static load rating	6.55 kN
Fatigue load limit	0.275 kN
Reference speed	32000 r/min
Limiting speed	20000 r/min
Minimum load factor	0.03
Calculation factor	14

Tolerances of run-out	
Range of section height at inner ring of assembled bearing	4 µm
Maximum run-out of inner ring side face to the bore	8 µm
Maximum axial run-out of inner ring of assembled bearing	8 µm
Range of section height at outer ring of assembled bearing	7 µm
Perpendicularity of outer ring outside surface	4 µm
Maximum axial run-out of outer ring of assembled bearing	8 µm
ISO tolerance class for geometrical tolerances	P5

Performance	
Basic dynamic load rating	11.9 kN
Basic static load rating	6.55 kN
Reference speed	32000 r/min
Limiting speed	20000 r/min
SKF performance class	SKF Explorer

Properties	
Filling slots	Without
Number of rows	1
Locating feature, bearing outer ring	Without

Bore type	Cylindrical
Cage	Sheet metal
Matched arrangement	No
Radial internal clearance	CN
Material, bearing	Bearing steel
Coating	Without
Sealing	Shield on one side
Sealing type	Non-contact
Lubricant	None
Relubrication feature	Without
Indicative carbon footprint for new product	0.28 kg CO₂e

Logistics	
Product net weight	0.077 kg
eClass code	23-05-08-01
UNSPSC code	31171504
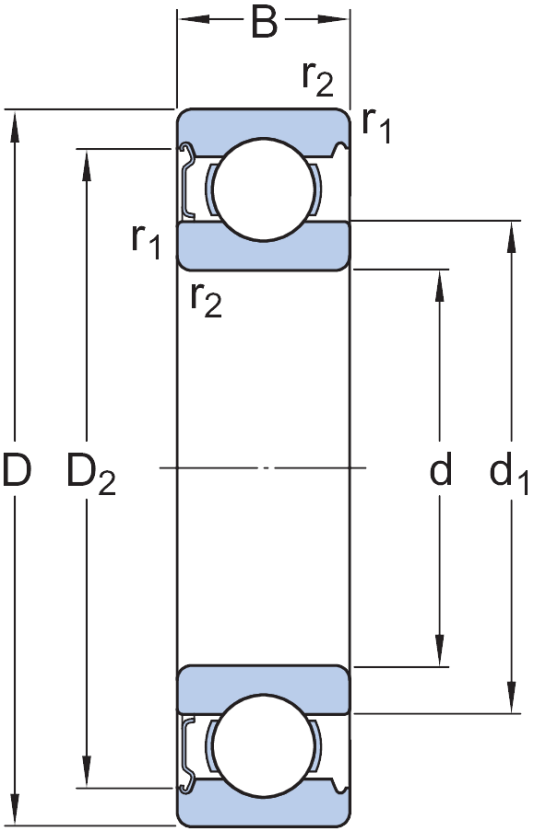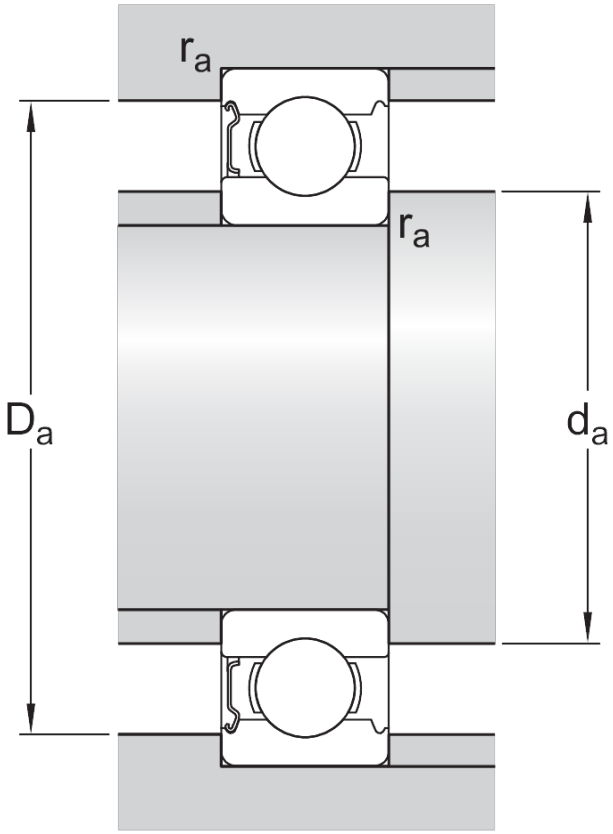
SKF drawings